 © Copyright Gatemaster 2026

SUPERLOCK 2.0 CODE PUSH-PULL QUICK-EXIT



CODE: C

5-Year Warranty **Reversible Handing**

Suitable for metal gate frames. For wooden gates, our surface-mounted option is available.

INCLUDED IN THE BOX

- 2.5mm hex key + 3mm hex key
- 2 x M8 fixing bolts
- Face plate
- Latchbolt
- Strike plate (2 x self-drilling fasteners)
- Code changing pack

MADE IN BRITAIN

Effortless exit from the inside meets keyless entry with the Superlock Quick-Exit. Equipped with a green push pad for easy exit which can be pushed or pulled and a digital keypad for controlled entry, this lock is perfect for gates that require convenience and ease of use.

Product code	Description
BQGD1030	To fit 10-30mm (3/8" - 1 1/8") gate frames
BQGD4060	To fit 40-60mm (1 5/8" to 2 3/8") gate frames
Available in:	Black RAL9005 Moss Green RAL6005

HELP & SUPPORT

Need further assistance? Our customer support team can help with order queries, product identification, spare parts, warranty information and general after-care.

UK: +44 1243 558580 US: +1 214 872 9687

www.gatemasterlocks.com support@gatemasterlocks.com

TECHNICAL SPECIFICATIONS

Lock type	Mechanical keypad gate lock
Keypad type	Single-sided
Handing	Reversible, supplied right-handed
Latchbolt throw	20mm (3/4")
Lock case width	70mm (2 3/4")
Fixing method	3-hole drilling. Bolt-on
Fixings included	Yes
Warranty	5 years
Compatible Keeps	BSK, BSKS, BSKG
Compatible Shroud	BQS

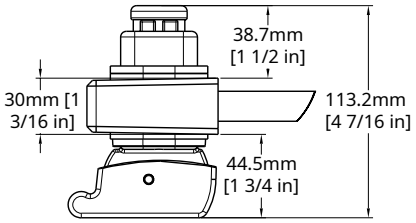

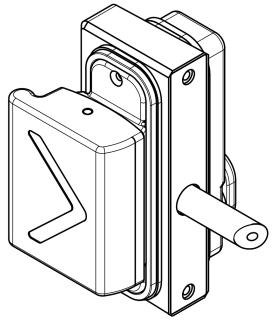

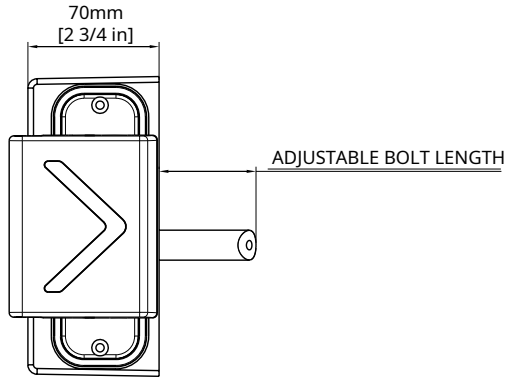

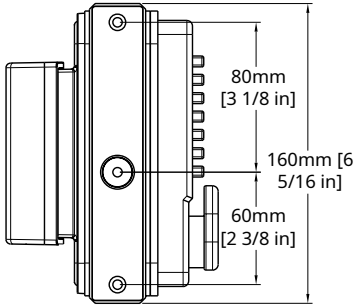

INSTALLATION INSTRUCTIONS

1. Check the gate handing. If left-hand is required, reverse the handing using the instructions below. For right-hand gates, go to step 2.
2. Drill 2 x 9mm (3/8") holes at 140mm (5 ½") centres for fixing bolts provided.
3. Drill a 18mm (¾") clearance hole for the latchbolt at 60mm (2 3/8") centres up from the bottom fixing hole.
4. Hold the lock against the back of the box section and screw on the latchbolt through the larger hole.
5. Lock the latchbolt with the hex key supplied by inserting the hex key into the end of the latchbolt.
6. Fix lock in place using the stainless steel bolt support plate and the countersunk screws provided. Ensure the latchbolt moves freely.
7. Fix the strike plate/keep to the gate post, ensuring the latchbolt engages fully when the gate is closed and cannot be accessed or manually retracted through the gap between the gate and post.

HOW TO CHANGE HANDING FROM RIGHT TO LEFT HANDING

Handing refers to the side on which the gate is hinged. This determines whether the lock should be set for left-hand or right-hand installation. When standing outside the gate, if the hinges are on the left, the lock must be changed to left-hand setting.

OUR LOCKS ARE SUPPLIED RIGHT-HANDED. IF A RIGHT-HANDED LOCK IS REQUIRED, SKIP THE STEPS BELOW AND CONTINUE WITH INSTALLATION.

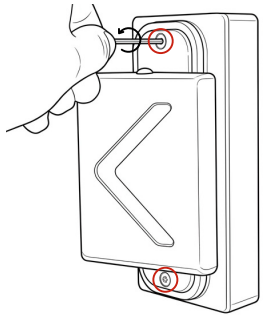

1. Using the 2.5mm hex key, unscrew the two screws located at the top and bottom.

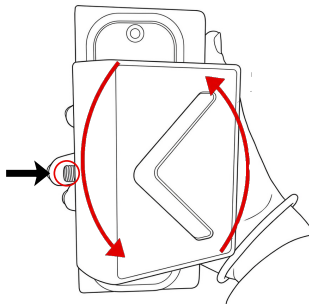

2. Flip the push pad 180° vertically and mount on the opposite side. Make sure to push the latch thread in before refitting the push pad.

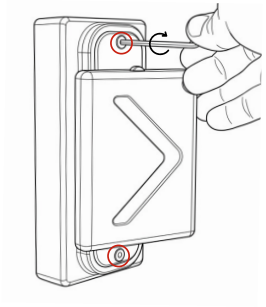

3. Refit the keypad using the 2.5mm hex key, ensuring the flat spindle and rubber gaskets are in place. Check the keypad is positioned on the correct side for the required handing.

Left-Hand Lock

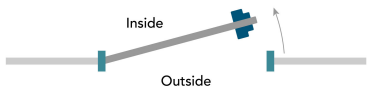

Right-Hand Lock

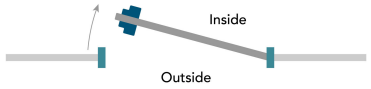

Check that the code and handle work correctly and then follow the instructions install the lock onto the gate.

HOW TO CHANGE THE CODE

© Copyright Gatemaster 2026

1. Check the original code is working on the keypad.
2. Remove the keypad off the lock. To do this, unscrew the two screws fixing the keypad to the panel.
3. Turn the keypad over and remove the 4 screws.
4. Lift off the covering panel carefully as there are 10 springs attached to this panel. Note that the red tumblers relate to the code shown above. Also note that the C tumbler is uncoloured and should not be removed.
5. To change the code hold the keypad with the code buttons down and depress & hold the C button (if this is not done you may damage some of the internal components). Reposition the tumblers to the new code (red tumblers are coded and blue tumblers are uncoded). Ensure that the square cut-out on each tumbler is facing the outside of the lock body, also ensure that the coloured mark is facing upwards. If any one tumbler is upside down or the wrong way round the lock will not work and if forced will break the internal components. The code must always start with a 'C'

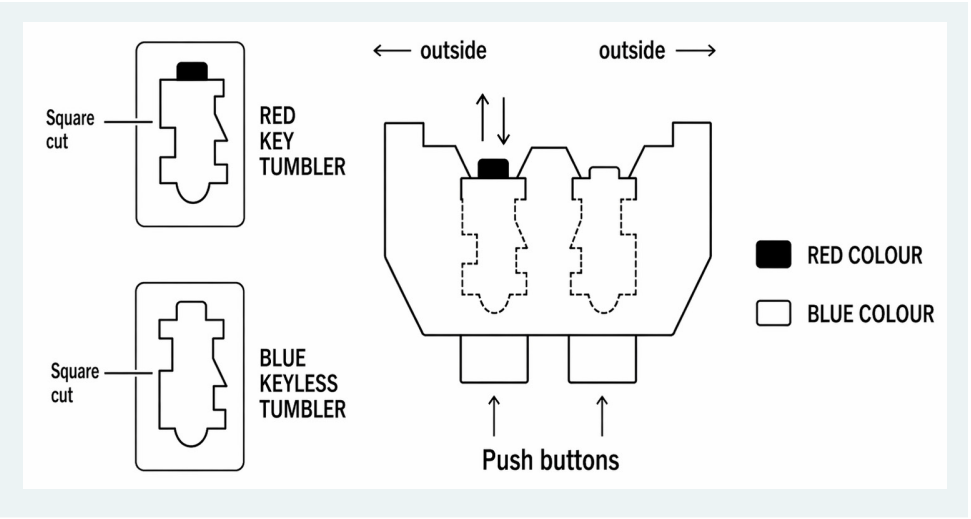

6. Replace the covering panel and tighten the 2 screws
7. The code is now changed, check to see that it is working correctly and make a note of the code for future reference. Once satisfied that the lock is working correctly refit keypads to the panel using the 2 screws and reassemble the lock.

MAINTENANCE

6 Monthly:

1. Remove keypads from the lock.
2. Spray the inside of the lock thoroughly with WD40 or equivalent, through the tumbler holes at the back of the lock.
3. Spray all the fixing accessories and the latch with WD40 or equivalent.
4. Push each of the buttons and rotate the knob several times to make sure the lock is working smoothly.