SUPERLOCK 2.0 PUSH-PULL QUICK-EXIT RAPIDRESET



CODE: C

5-Year Warranty **Reversible Handing**

Suitable for metal gate frames. For wooden gates, our surface-mounted option is available.

INCLUDED IN THE BOX

- 2.5mm hex key + 3mm hex key
- 2 x M8 fixing bolts
- Face plate
- Latchbolt
- Strike plate (2 x self-drilling fasteners)

MADE IN BRITAIN

Combine safety and convenience with quick, easy exit from the inside and secure keypad code entry outside. Featuring a green push pad which can be both pushed or pulled for effortless exit, this lock is ideal for gates the require fast, reliable egress.

Product code	Description
BQDGRR1030	To fit 10-30mm (3/8" - 1 1/8") gate frames
BQDGRR4060	To fit 40-60mm (1 5/8" to 2 3/8") gate frames
Available in:	Black RAL9005 Moss Green RAL6005

HELP & SUPPORT

Need further assistance? Our customer support team can help with order queries, product identification, spare parts, warranty information and general after-care.

UK: +44 1243 558580 US: +1 214 872 9687

www.gatemasterlocks.com support@gatemasterlocks.com

© Copyright Gatemaster 2026

TECHNICAL SPECIFICATIONS

Lock type	Mechanical keypad gate lock
Keypad type	RapidReset single-sided
Handing	Reversible, supplied right-handed
Latchbolt throw	20mm (3/4")
Lock case width	70mm (2 3/4")
Fixing method	3-hole drilling. Bolt-on
Fixings included	Yes
Warranty	5 years
Compatible Keeps	BSK, BSKS, BSKG
Compatible Shroud	BQS

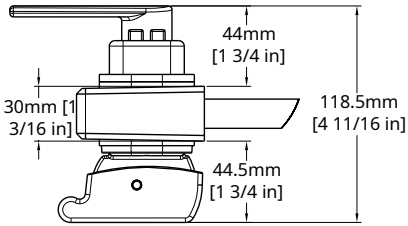

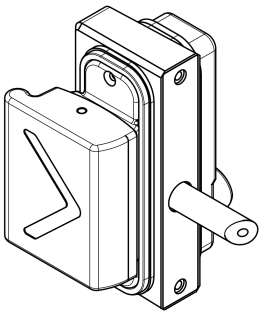

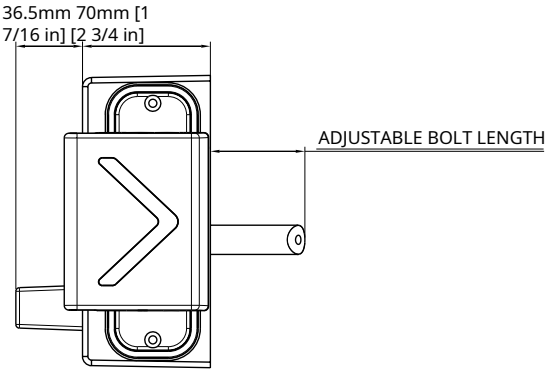

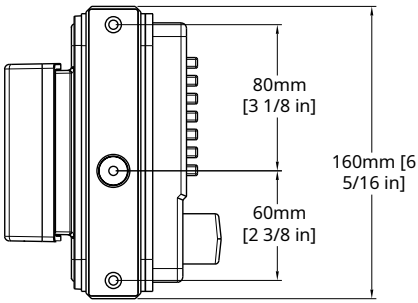

INSTALLATION INSTRUCTIONS

1. Check the gate handing. If left-hand is required, reverse the handing using the instructions below. For right-hand gates, go to step 2.
2. Drill 2 x 9mm (3/8") holes at 140mm (5 ½") centres for fixing bolts provided.
3. Drill a 18mm (¾") clearance hole for the latchbolt at 60mm (2 3/8") centres up from the bottom fixing hole.
4. Hold the lock against the back of the box section and screw on the latchbolt through the larger hole.
5. Lock the latchbolt with the hex key supplied by inserting the hex key into the end of the latchbolt.
6. Fix lock in place using the stainless steel bolt support plate and the countersunk screws provided. Ensure the latchbolt moves freely.
7. Fix the strike plate/keep to the gate post, ensuring the latchbolt engages fully when the gate is closed and cannot be accessed or manually retracted through the gap between the gate and post.

HOW TO CHANGE HANDING FROM RIGHT TO LEFT HANDING

Handing refers to the side on which the gate is hinged. This determines whether the lock should be set for left-hand or right-hand installation. When standing outside the gate, if the hinges are on the left, the lock must be changed to left-hand setting.

OUR LOCKS ARE SUPPLIED RIGHT-HANDED. IF A RIGHT-HANDED LOCK IS REQUIRED, SKIP THE STEPS BELOW AND CONTINUE WITH INSTALLATION.

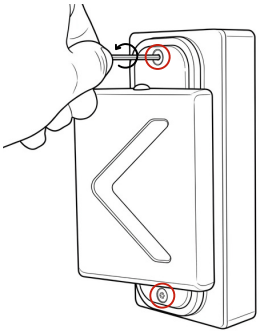

1. Using the 2.5mm hex key, unscrew the two screws located at the top and bottom.

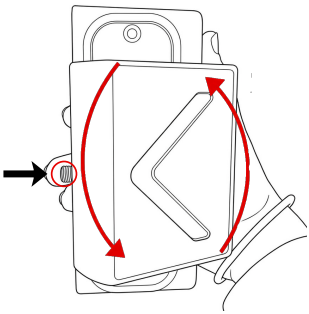

2. Flip the push pad 180° vertically and mount on the opposite side. Make sure to push the latch thread in before refitting the push pad.

Check that the code and handle work correctly and then follow the instructions install the lock onto the gate.

Left-Hand Lock

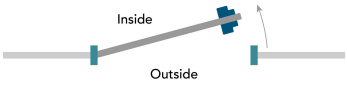

Right-Hand Lock

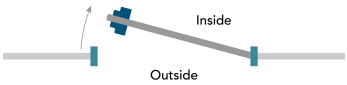

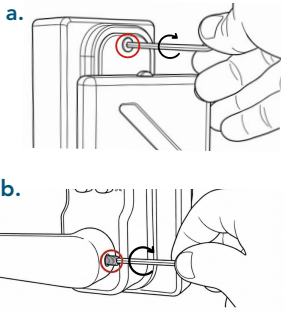

3. a. Refit the keypad from the rear using the 2.5mm hex key, ensuring the flat spindle and rubber gaskets are in place.
3. b. Then fit the keypad handle with the hex key, ensuring it faces the opposite direction to the latch.