SUPERLOCK QUICK-EXIT SECURITY SHROUD



Prevents outside access | **Updated design**

This security shroud prevents outside access to the gate, stopping intruders from reaching around to operate the lock.

PRODUCT DETAILS

Product code	Description
BQS2	Superlock quick-exit shroud
Compatible with: BQK, BQDG, BQ-NA & BQDGRR	

INSTALLATION

Bolt the shroud in front of the gate lock with no additional fixing required.

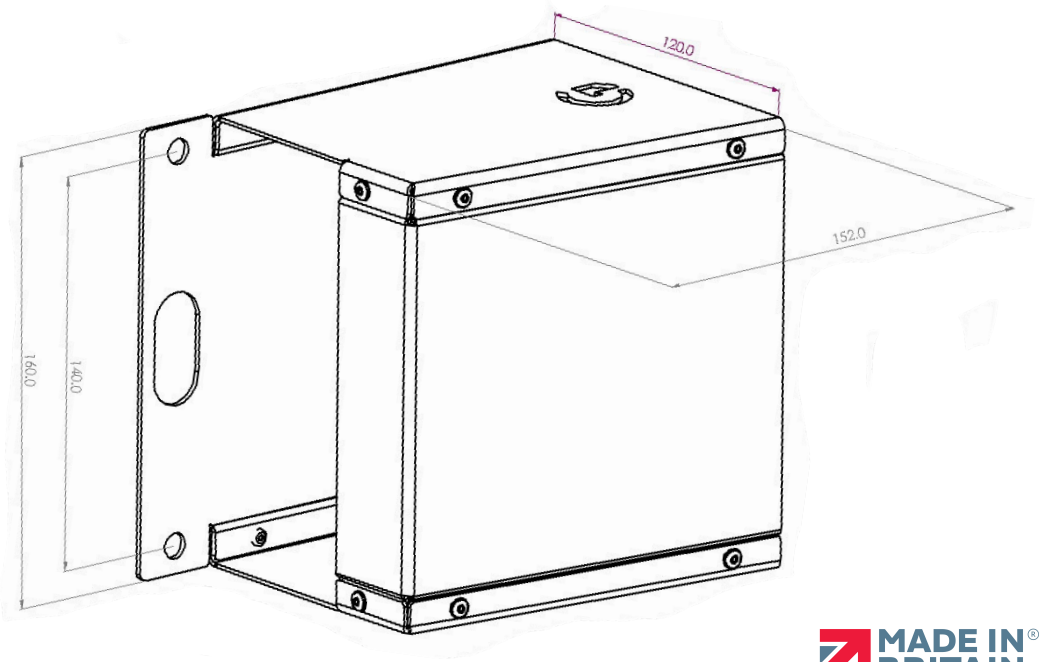

MADE IN BRITAIN

© Copyright Gatemaster 2026

SUPERLOCK DELTA HANDLE SECURITY SHROUD



Internal handle protection | **Robust construction**

This security shroud prevents outside access to the gate, stopping intruders from reaching around to operate the lock.

PRODUCT DETAILS

Product code	Description
BQSLL	Left-hand shroud
BQSLR	Right-hand shroud
Compatible with: BDGSRR & BDGSD	

INSTALLATION

Simply bolt on using the same holes required for the Superlock gate lock- no welding or specialist tools required.

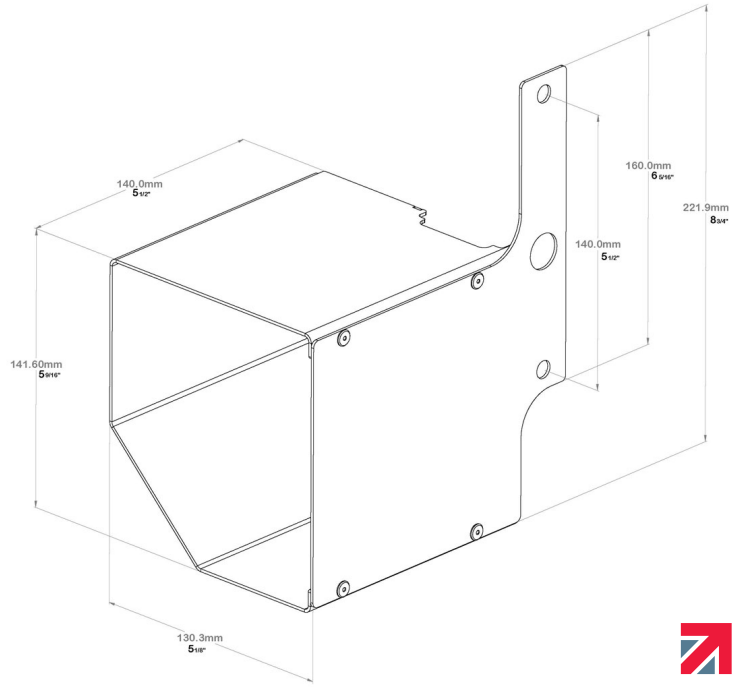

MADE IN BRITAIN